Work Order ID 64813

Friday, December 17, 2010 8:00:17 AM

Item ID: D3640-3 **Accept** **Setup Start**

Revision ID: **Stop**

Item Name: Belt Guide

Start Date: 12/16/2010 **Start Qty:** 6.00 **Cust Item ID:**

Required Date: 1/19/2011 **Req'd Qty:** 6.00 **Customer:**

Reference:

Approvals: **Process Plan:** PL **Date:** 10-12-17 **Tooling:** _____ **Date:** _____ **Run Start**

QC: _____ **Date:** _____ **SPC (Y/N):** _____ **Date:** _____ **Stop**

Sequence ID/ Work Center ID	Operation Description	Set Up/ Run Hours	Tool ID	Tool #	Plan Code	Accept Qty	Reject Qty	Reject Number	Insp. Stamp
Draw Nbr	**Revision Nbr**								
D3640	Rev A								
100	BAND SAW	0.00							
Bandsaw	**Memo**	0.00							
Jeaspa Bandsaw	Cut blank 3.8 " long		JL 10/12/23			6			
110	HAAS CNC VERTICAL MACHINING #1	0.00							
HAAS 1	**Memo**	0.00				6	~~6~~		
HAAS CNC vertical machine #1	1- Mill as per Folio FA670 & Dwg D3640 Rev: A ☐2-Deburr and Blend rad intersection with deburring tool.		JL 10/12/23						
120	QC2- Inspect parts off machine FAI/FAIB	0.00							
QC	**Memo**	0.00				6	~~6~~		
Quality Control			JL 10/12/23						

Dart Aerospace Ltd

W/O:		WORK ORDER CHANGES					
DATE	STEP	PROCEDURE CHANGE	By	Date	Qty	Approval Chief Eng / Prod Mgr	Approval QC Inspector

Part No: _____ **PAR #:** _____ **Fault Category:** _____ **NCR:** Yes No **DQA:** _____ **Date:** _____

Resolution: _____ **Disposition:** _____ **QA: N/C Closed:** _____ **Date:** _____

NCR:		WORK ORDER NON-CONFORMANCE (NCR)						
DATE	STEP	Description of NC Section A	Corrective Action Section B			Verification Section C	Approval Chief Eng	Approval QC Inspector
			Initial Chief Eng	Action Description Chief Eng	Sign & Date			

NOTE: Date & initial all entries

H:\fFORMS\Quality Assurance\approved QA\NCRWO RevE

Work Order ID 64813

Friday, December 17, 2010 8:00:17 AM

Item ID: D3640-3 **Accept** **Setup Start**

Revision ID: **Stop**

Item Name: Belt Guide

Start Date: 12/16/2010 **Start Qty:** 6.00 **Cust Item ID:**

Required Date: 1/19/2011 **Req'd Qty:** 6.00 **Customer:**

Reference:

Approvals: **Process Plan:** _____ **Date:** _____ **Tooling:** _____ **Date:** _____ **Run Start**

QC: _____ **Date:** _____ **SPC (Y/N):** _____ **Date:** _____ **Stop**

Sequence ID/ Work Center ID	Operation Description	Set Up/ Run Hours	Tool ID	Tool #	Plan Code	Accept Qty	Reject Qty	Reject Number	Insp. Stamp
130	QC8- Inspect parts - second check	0.00							
QC	Memo	0.00				6	0		
Quality Control									
140	Identify as per dwg & Stock Location: 244	0.00							
Packaging	Memo	0.00				10/12/30			
Packaging									
150	QC21- Final Inspection - Work Order Release	0.00							
QC	Memo	0.00							
Quality Control									

10/12/23

CL 11/01/03

CL 11/01/03

Dart Aerospace Ltd

W/O:		WORK ORDER CHANGES					
DATE	STEP	PROCEDURE CHANGE	By	Date	Qty	Approval Chief Eng / Prod Mgr	Approval QC Inspector

Part No: _____ **PAR #:** _____ **Fault Category:** _____ **NCR:** Yes No **DQA:** _____ **Date:** _____

Resolution: _____ **Disposition:** _____ **QA: N/C Closed:** _____ **Date:** _____

NCR:		WORK ORDER NON-CONFORMANCE (NCR)						
DATE	STEP	Description of NC Section A	Corrective Action Section B			Verification Section C	Approval Chief Eng	Approval QC Inspector
			Initial Chief Eng	Action Description Chief Eng	Sign & Date			

NOTE: Date & initial all entries

H:\fFORMS\Quality Assurance\approved QA\NCRWO RevE

Picklist Print

Friday, December 17, 2010 8:00:22 AM

1

Work Order ID: 64813

Parent Item: D3640-3

Parent Item Name: Belt Guide

Start Date: 12/16/2010 **Required Date:** 1/19/2011

Start Qty: 6.00 **Required Qty:** 6.00

Comments: IPP Rev:A New Issue 07-01-15 JLM

Component Item ID/ Item Name	Replacement Item ID	Mfg/ Purch	Bin Item	Primary Location	Last Location	Route Seq ID	Unit of Measure	Qty on Hand	Qty per Kit	Total Qty	Qty Issued	Date Issued	Status
MDELRINB0.75X1.250 Delrin Bar		Purchased	No			100	f	27.9024	0.4	2.526316 10/12/23			

Location	Loc Qty	Loc Code
MAT050	27.9024	
14535	27.9024	

2.53

Dart Aerospace Ltd

W/O:		WORK ORDER CHANGES					
DATE	STEP	PROCEDURE CHANGE	By	Date	Qty	Approval Chief Eng / Prod Mgr	Approval QC Inspector

Part No: _____ **PAR #:** _____ **Fault Category:** _____ **NCR:** Yes No **DQA:** _____ **Date:** _____

Resolution: _____ **Disposition:** _____ **QA: N/C Closed:** _____ **Date:** _____

NCR:		WORK ORDER NON-CONFORMANCE (NCR)						
DATE	STEP	Description of NC Section A	Corrective Action Section B			Verification Section C	Approval Chief Eng	Approval QC Inspector
			Initial Chief Eng	Action Description Chief Eng	Sign & Date			

NOTE: Date & initial all entries

H:\fFORMS\Quality Assurance\approved QA\NCRWO RevE

DART AEROSPACE LTD	Work Order:	64813
Description: Belt Guide	**Part Number:**	D3640-3
Inspection Dwg: D3640 **Rev:** A		Page 1 of 1

FIRST ARTICLE INSPECTION CHECKLIST

[X] First Article [ ] Prototype

Drawing Dimension	Tolerance	Actual Dimension	Accept	Reject	Method of Inspection	Comments
3.58	+/-0.030	3.580	✓		Pin SL-3	
0.80	+/-0.030	.803	✓		"	
0.13	+/-0.030	.129	✓		"	
0.31	+/-0.030	.311	✓		"	
0.200	+/-0.010	.199	✓		"	
0.40	+/-0.030	.401	✓		"	
0.03 x 45°	+/-0.030 x 0.5°	.03x45°	✓		"	
0.22	+/-0.030	.226	✓		"	
0.40	+/-0.030	.393	✓		"	
0.625	+/-0.010	.632	✓		"	
R0.13	+/-0.030	.125	✓		R-G	

Measured by:	SL	Audited by:	[illegible]	Prototype Approval:	N/A
Date:	10/12/23	Date:	10/12/23	Date:	N/A

Rev	Date	Change	Revised by	Approved
A	07.10.19	New Issue	KJ/EC/DD	[illegible]

Dart Aerospace Ltd

W/O:		WORK ORDER CHANGES					
DATE	STEP	PROCEDURE CHANGE	By	Date	Qty	Approval Chief Eng / Prod Mgr	Approval QC Inspector

Part No: _____ **PAR #:** _____ **Fault Category:** _____ **NCR:** Yes No **DQA:** _____ **Date:** _____

Resolution: _____ **Disposition:** _____ **QA: N/C Closed:** _____ **Date:** _____

NCR:		WORK ORDER NON-CONFORMANCE (NCR)						
DATE	STEP	Description of NC Section A	Corrective Action Section B			Verification Section C	Approval Chief Eng	Approval QC Inspector
			Initial Chief Eng	Action Description Chief Eng	Sign & Date			

NOTE: Date & initial all entries

SHOP COPY
RETURN TO
ENGINEERING
UNCONTROLLED COPY
SUBJECT TO AMENDMENT
WITHOUT NOTICE
WORK ORDER
NO. 65863
8/10-12-17

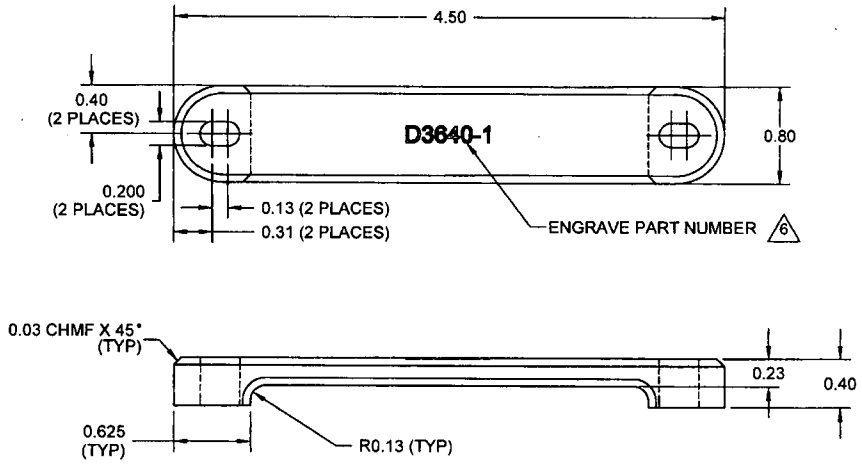

D3640-1 BELT GUIDE
(WAS GENEVA P/N G10605-1)

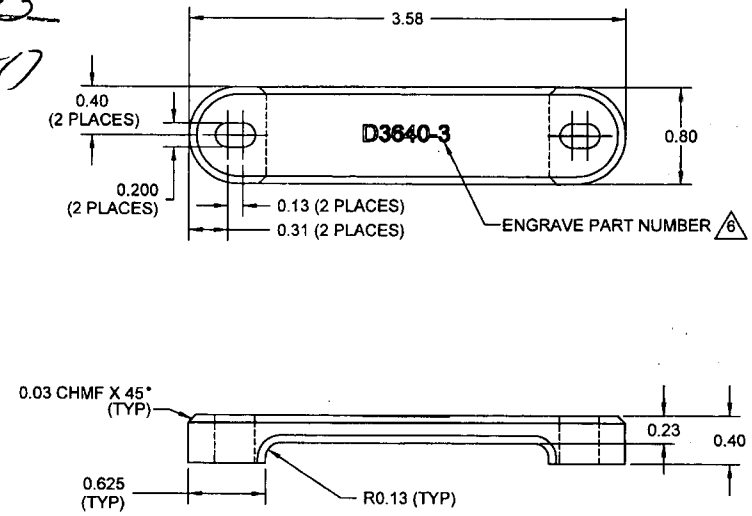

D3640-3 BELT GUIDE
(WAS GENEVA P/N G10605-2)

RELEASED
07.09.07

NOTES:
1) MATERIAL: BLACK DELRIN II 150E OR ACETRON GP ACETAL BAR (REF DART SPEC M-DELRIN-B)
2) FINISH: NONE
3) TOLERANCES: PER DART QSI 018 UNLESS OTHERWISE NOTED
4) UNITS: INCHES UNLESS OTHERWISE NOTED
5) BREAK SHARP EDGES: 0.005 TO 0.010 MAX
6) IDENTIFICATION: ENGRAVE PART NUMBERS TO MAX DEPTH OF 0.010 AT LOCATIONS SHOWN
7) WEIGHT: 0.03 lbs

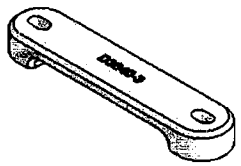

REV.	DESCRIPTION	BY	DATE
A	NEW ISSUE; REPLACES G10605	LE	07.07.27

DESIGN	TS	DART AEROSPACE USA, INC. PORT HADLOCK, WA
DRAWN	LE	
CHECKED		DRAWING NO. D3640 — REV. A — SHEET 1 OF 1
MFG. APPR.		
APPROVED		TITLE BELT GUIDE — SCALE 1:1
DE APPR.		
DATE	07.07.27	

COPYRIGHT © 2007 BY DART AEROSPACE USA, INC.
THIS DOCUMENT IS PRIVATE AND CONFIDENTIAL AND IS SUPPLIED ON THE EXPRESS CONDITION THAT IT IS NOT TO BE USED FOR ANY PURPOSE OR COPIED OR COMMUNICATED TO ANY OTHER PERSON WITHOUT WRITTEN PERMISSION FROM DART AEROSPACE USA, INC.

Dart Aerospace Ltd

W/O:		WORK ORDER CHANGES					
DATE	STEP	PROCEDURE CHANGE	By	Date	Qty	Approval Chief Eng / Prod Mgr	Approval QC Inspector

Part No: _____ **PAR #:** _____ **Fault Category:** _____ **NCR:** Yes No **DQA:** _____ **Date:** _____

Resolution: _____ **Disposition:** _____ **QA: N/C Closed:** _____ **Date:** _____

NCR:		WORK ORDER NON-CONFORMANCE (NCR)						
DATE	STEP	Description of NC Section A	Corrective Action Section B			Verification Section C	Approval Chief Eng	Approval QC Inspector
			Initial Chief Eng	Action Description Chief Eng	Sign & Date			

NOTE: Date & initial all entries

H:\fFORMS\Quality Assurance\approved QA\NCRWO RevE